# 3040-W

**Surface mount panic switch, latching red LED indicator and screw terminals, SPDT, white**



# 3040-W

## Surface mount panic switch, latching red LED indicator and screw terminals, SPDT, white

## Spécifications techniques

### General

| | |
|---|---|
| Type | Omskifter |
| Water resistant | No |
| LED | Yes |
| Latching LED circuit | Yes |
| Alarm contact | SPDT |
| Connections | Screw terminals |

### Wired/wireless

| | |
|---|---|
| Wired-wireless | Kablede |

### Electrical

| | |
|---|---|
| Power supply value | 7 to 15 VDC |
| Current consumption | 8 mA |

### Physical

| | |
|---|---|
| Physical dimensions | 74 × 45 × 19 mm |
| Colour | Hvid |

### Environmental

| | |
|---|---|
| Operating temperature | -18 to +43°C |

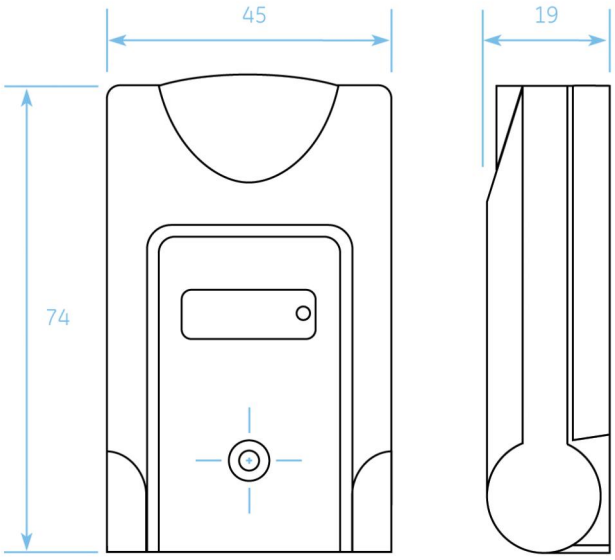


En tant que société d'innovation, Kidde Global Solutions se réserve le droit de modifier les spécifications des produits sans préavis. Pour les dernières spécifications du produit, visitez le site web be.firesecurityproducts.com ou contactez votre représentant commercial.

Last updated on 12 November 2026 - 18:57