PSB-0226

LED beacon (VID), red deep base, red lens

General

The PSB-0226 is a general purpose LED VID (Visual Indicator Device) for fire alarm applications. It features a deep first-fix base containing all wiring connections allowing for easy removal/placement of the device. The dep base allows for easy surface mount cable installations in addition to elevating the ingress protection of the device to IP65, allowing for weatherproof outdoor installation.

Easy and Fast Installation

The PSB-0226 allows faster installation and maintenance thanks to an innovative mounting base. Dispensing with the need for locking screws, this device uses a TimeSaver™ base. Heads are simply locked onto the base with a “twist and click” action, allowing fitting or removal at any time because the base is the only component that needs to be wired. As the cabling requirement is reduced, commissioning time and costs are naturally reduced as well.

Efficient and versatile

A mechanism for optionally locking the VID to the base may be activated if required. Once activated, a special tool is required to remove the VID from the base.

The PSB-0226 utilises a full faced translucent case, giving a much larger lens area and a greater spread of light.



Details

- High output LED beacon for bright notification
- Simple ‘First Fix’ installation with wiring directly to first-fix base (no second fix wiring)
- Anti-tamper locking mechanism prevents unauthorised removal
- Deep mounting base for surface cable installation
- Weatherproof to IP65
- Synchronised flash supported

PSB-0226

LED beacon (VID), red deep base, red lens

Technical specifications

General

Compatibility	Conventional notification systems
System support	Kidde Commercial - Conventional notification circuits

Electrical

Power supply type	VDC
Operating voltage	10 to 60 VDC
Current consumption	55 mA @ 24 VDC
Number of connection terminals	4
Cable entries	2 x 20 mm cable glands

VID

Colour	Red
Rating	Continuous
Flash frequency	30 or 60 /min
Synchronization	Supported

Physical

Physical dimensions	97.5 x 104 mm
Net weight	250 g
Colour	Red
Mounting type	Base mount, Ceiling mount, Wall mount
Mounting position	Base
Mounting base	Deep
Material	Flame retardant Polycarbonate
Texture	Smooth

Environmental

Vandal proof	No
Operating temperature	-25 to +65°C
Environment	Indoor, Outdoor
IP rating	IP65

Regulatory

Compliancy	CE, REACH, RoHS 3, WEEE
Certification	CE

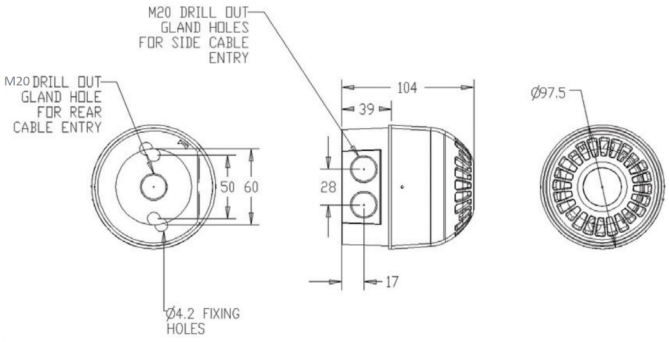

EDWARDS
Built for Resilience

As a company of innovation, Kidde Global Solutions reserves the right to change product specifications without notice. For the latest product specifications, visit firesecurityproducts.com online or contact your sales representative.

Last updated on 14 August 2025 - 14:39