KE-AS3015W-WMIP

Sirena/Alarma visual direccionable inteligente Serie Excellence para exterior, montaje en pared

General

The innovative Excellence range of intelligent addressable devices offers advanced features for reliability and peace of mind. Coupled with features for ease of installation and maintenance on new fire detection systems, it's a perfect match for exceptional overall performance.

The KE-AS3015W-WMIP is a WHITE bodied, weatherproof addressable wall mount sounder & visual alarm device (VAD) for Excellence series fire systems. They are connected over a 2-wire loop and are loop powered. They are compatible with automatic synchronisation controlled from the CIE (control panel).

Installation

For ease of system planning, Excellence notification devices share a first fix base with Excellence point detectors. This allows for standardised cabling with less cabling issues, and allows devices to be interchanged without rewiring should requirements change. Optional installation accessories to support surface conduit entry, address tags and address labels are available to suit multiple applications.

To assist with the installation and commissioning process, a multitude of features ensure that the device is easily and properly inserted into the base, securely connected to the loop and that it functions perfectly. A local multi-coloured LED indicator helps to visualise device status locally without requiring access to the fire panel.

Configuration & Operation

All functional programming is controlled from the CIE and can be changed on the fly without access to the device.

Should the loop be heavily loaded, all Excellence notification devices offer a unique "Battery assisted activation" feature allowing the device to draw its activation power from 3 x CR123 batteries that may be optionally fitted to the device. Using batteries protects the device loop from possible overload which may put the system at risk, and allows for as many as 128 notification devices to be fitted to any Excellence loop. When batteries are used they are automatically supervised buy the device, with ample warning time when batteries require replacing. Under standard operating conditions batteries should provide more than 5 years of support without requiring replacement.

Safety & Security

Automatic daily self testing ensures that when the device is activated, everything works as expected. Pre-activation self testing ensures that a warning is raised before an event takes place, minimising the risk when notification is required.



Detalles

- Se suministra con un accesorio de base de montaje en superficie con clasificación IP65 que garantiza la clasificación IP65 para aplicaciones en exteriores
- Soporte para entrada de cables superior, inferior o trasera para mayor flexibilidad de aplicación
- Base de primera fijación estándar compartida con detectores puntuales para facilitar la planificación, la logística y la instalación
- Base lock, address tag and surface cabling support for easy installation in all conditions
- Bloqueo de base, etiqueta de dirección, faldón de ajuste y soporte de cableado de superficie para una fácil instalación en todas las condiciones
- Alimentado por lazo con activación asistida por batería que permite hasta 128 dispositivos por lazo
- 32 tonos seleccionables en 4 niveles de volumen seleccionables que se pueden reconfigurar desde el ECI
- 3 niveles de potencia VAD seleccionables que se pueden reconfigurar desde el ECI
- Soporte de evacuación en múltiples etapas para flexibilidad de aplicaciones
- Pruebas automáticas previas y posteriores a la activación que garantizan la máxima seguridad
- Sincronización automática
- Indicador LED de diagnóstico tricolor para una rápida puesta en marcha y asistencia en la detección de fallos

KE-AS3015W-WMIP

Sirena/Alarma visual direccionable inteligente Serie Excellence para exterior, montaje en pared

Especificaciones técnicas

General

Compatibility	Sistemas Excellence de Kidde commercial
Addressing method	DIL switch
Monitoring	Activated, Battery level, Continuously self-checking, Fault

Electrical

Power supply type	Batteries, Loop powered
Batteries	3 x CR123 (opcional)
Operating voltage	17 a 29 VDC
Communication voltage	4 a 11 V pulsada
Current consumption	250 µA (Reposo) Consulte la hoja de instalación para conocer los valores de corriente de alarma (según la configuración)

Sounder

Output level	55 a 102 dB(A) - Depende del tono
Output level adjustment	4 niveles
Frequency	Seleccionable por el usuario
Selectable tones	32
Synchronization	Soportado
No. of stages	3

VAD

Colour	Rojo
Rating	W-2-6 (Bajo) / W-2.4-6.5 (Medio) / W-2.4-8 (Alto)
Floor coverage	< 64 m²
Flash frequency	0.5 Hz (1 flash cada 2 s)
Synchronization	Soportado

Physical

Physical dimensions	110 x 129 mm (Ø x H)
Net weight	465 g
Colour	Traffic white (RAL9016)
Mounting type	Base mount
Mounting position	Wall
Mounting height	Hasta 2,4 m
Mounting base	Deep
Material	PC / ABS
Texture	Smooth

Environmental

Vandal proof	No
Operating temperature	-25 a +70°C
Storage temperature	-25 a +75°C
Relative humidity	10 a 93% (sin condensación)
Environment	Indoor, Outdoor
IP rating	IP33C

Regulatory

Compliancy	CE, REACH, RoHS 3, WEEE
Certification	CPR

Productos compatibles

Categoría	Referencia	Descripción
Detection device	KE-DB3010W	Accesorio detector inteligente serie Excellence - base estándar

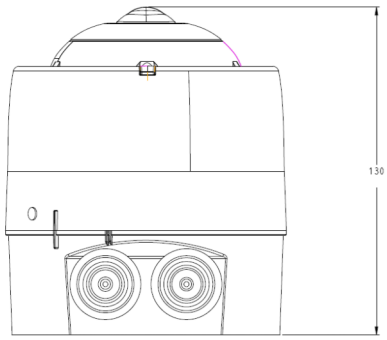

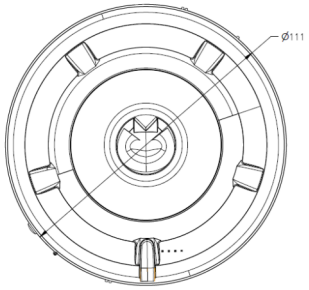

KIDDE COMMERCIAL

Como empresa innovadora, Kidde Global Solutions se reserva el derecho de modificar las especificaciones de los productos sin previo aviso. Para conocer las últimas especificaciones de los productos, visite la Web de es.firesecurityproducts.com o póngase en contacto con su comercial.

Last updated on 12 November 2026 - 18:57