# HB304

**Surface mount panic switch, latching red LED indicator and screw terminals, SPDT, white**




## Details

- Mounts underneath or on side of desk or counter
- Smooth housing prevents accidental damage to clothing
- Actuating lever designed to accommodate only tip of finger
- Reed contact resets when lever is in closed position
- Version with latching LED available

# HB304

## Surface mount panic switch, latching red LED indicator and screw terminals, SPDT, white

## Technische specificaties

### General

| | |
|---|---|
| Type | Omskifter |
| Water resistant | No |
| LED | Yes |
| Latching LED circuit | Yes |
| Alarm contact | SPDT |
| Connections | Screw terminals |

### Wired/wireless

| | |
|---|---|
| Wired-wireless | Kablede |

### Electrical

| | |
|---|---|
| Power supply value | 7 to 15 VDC |

### Physical

| | |
|---|---|
| Physical dimensions | 74 × 45 × 19 mm |
| Colour | Hvid |

### Environmental

| | |
|---|---|
| Operating temperature | -18 to +43°C |

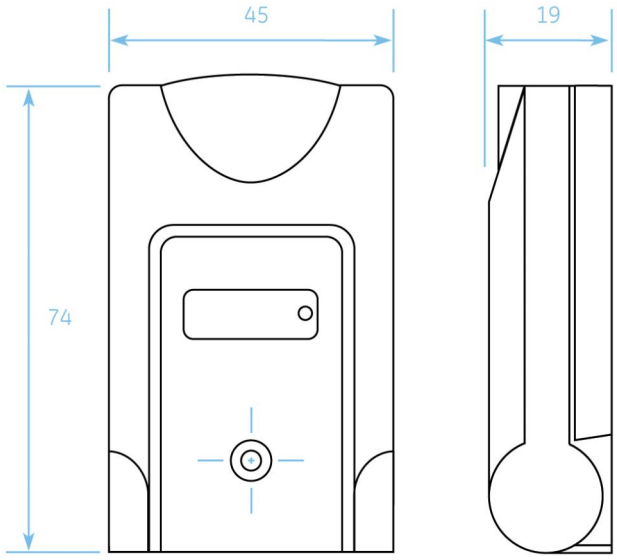


Als een bedrijf van innovatie behoudt Kidde Global Solutions zich het recht voor productspecificaties zonder kennisgeving te wijzigen. Ga voor de nieuwste productspecificaties online naar be.firesecurityproducts.com of neem contact op met uw verkoopvertegenwoordiger.

Last updated on 12 November 2026 - 18:57